LARGE BACKBAND PFJ

Dimensions: 1-37/64" x 1-1/4"
Material: Primed Pine
Sold by the Linear Foot
Contact Us to Order
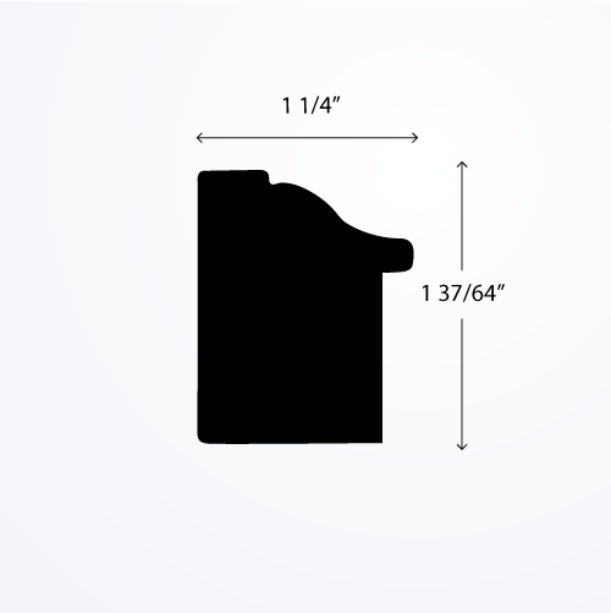
SKU: 5101189
Categories: Miscellaneous, Primed Pine